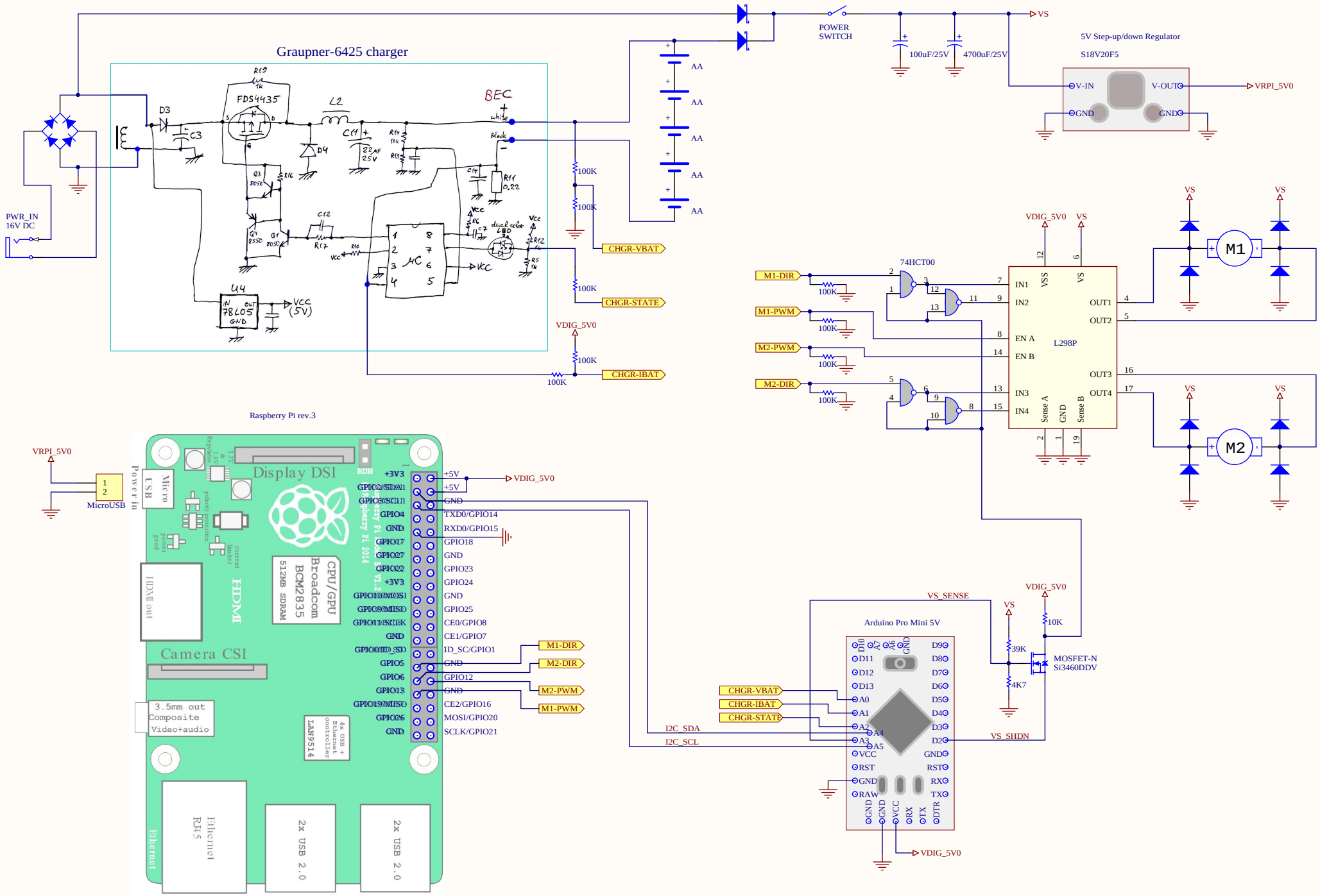

Title	**Robotic Platform Schematics**		BoredomProjects.net
Size: A3	Number:	Revision: 1.1	
Date: 16.06.2016	Time: 08:53:51	Sheet1 of 1	
File: D:\Tools\Altium Projects\Robot\Robot_schematics.SchDoc			